Uppgjord (även faktaansvarig om annan) - *Prepared (also subject responsible if other)*		Nr - *No.*		
Sara Hedfors		POL-07:122		
Dokansv/Godk - *Doc respons/Approved*	Kontr - *Checked*	Datum – *Date*	Rev	File
Thomas Hedfors	TH	2007-11-03	A	

Technical specification:

Article:	POLNET / RS232 / Ethernet DCE (also avaliable as DTE)
Dimensions:	150 x 175 x 45 mm
Weight	0.67 kg
Network:	Ethernet 10Base-T or 100Base TX autosense
	RJ45 connector
Communication:	Current loop, multi drop (no polarity dependancy)
	No limitation in layout
No of signs:	max 62 signs
Distance:	max 2 km network segment
Cabling:	2 wire twisted pair, min 0.6 mm²
Data format:	4800 Baud, half duplex
Interface:	Optically isolated
Configuration:	Hi / Low current, Echo Cancel / Restore, Active / Passive, RS232 / Ethernet
Power req:	115 / 230 Volt ± 15%, 50 Hz, 10 VA
MTBF:	60000 h

Main office
Kvartsgatan 1 B
SE-749 40 ENKÖPING
Phone +46 (0)171-41 45 90
Fax +46 (0)171-41 45 95

Production
Skäggebyvägen 33
SE-612 44 FINSPÅNG

Postgiro
48 54 14-7

Bankgiro
5086-1483

Org.no.
556536-8817

Webpage
www.poltech.se

W6 PE connected to logic ground

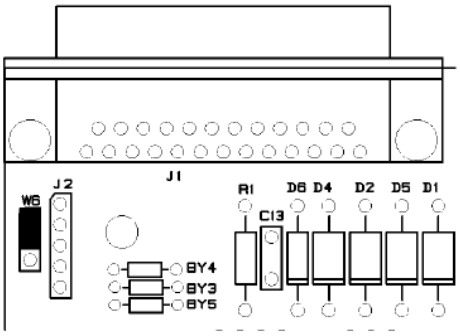

W6 PE isolated from logic ground

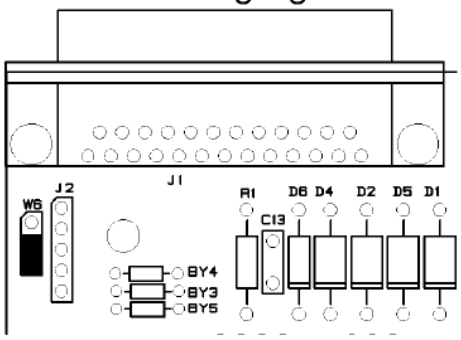

230 VAC input

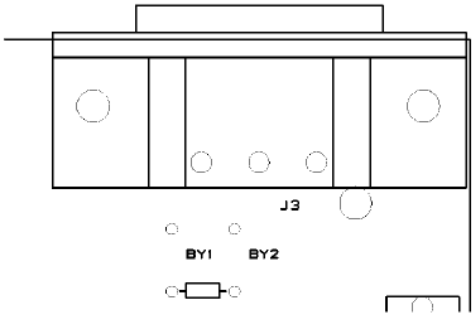

117 VAC input

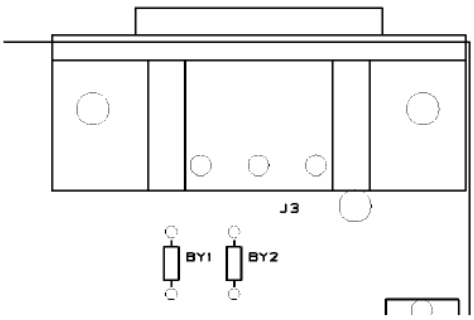

W1 W7 POLNET Active
W2 100 mA

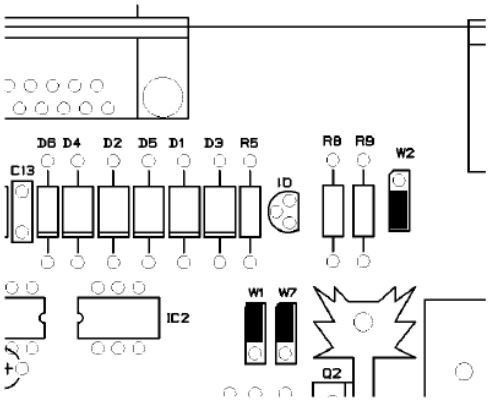

W1 W7 POLNET Active
W2 50 mA

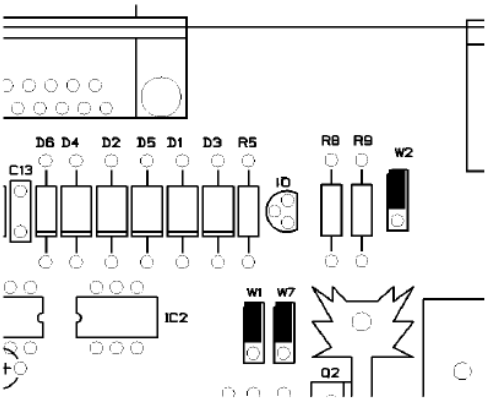

W1 W7 POLNET Passive

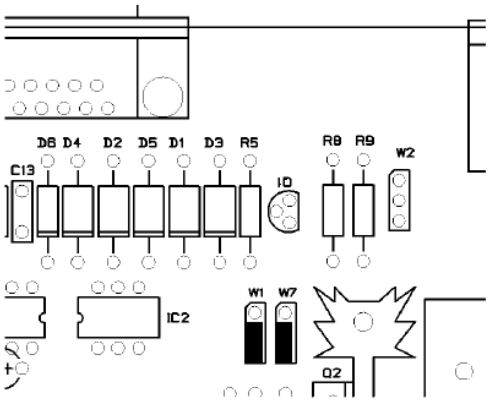

Ethernet - POLNET
Normal Echo

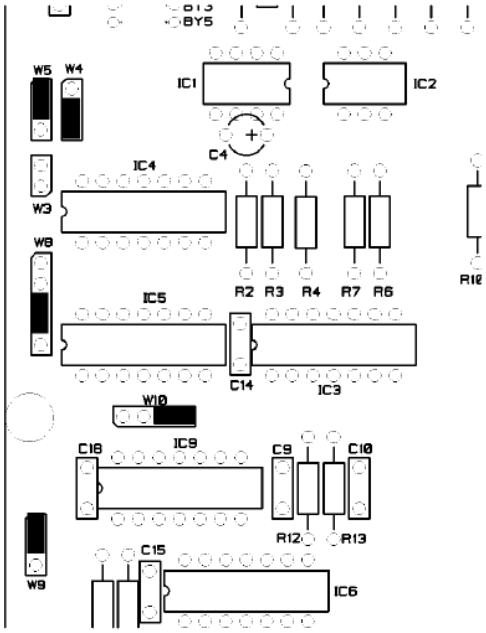

Ethernet - POLNET
Echo Cancel

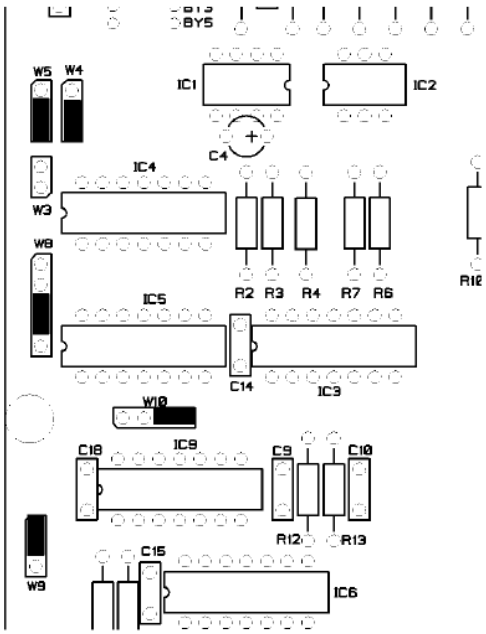

Ethernet - RS232
Also used for port configuration

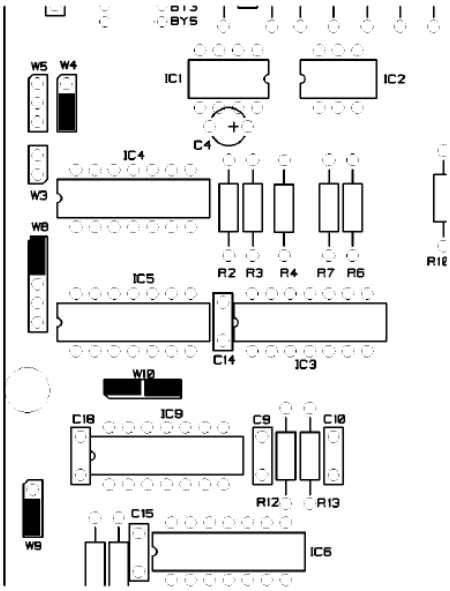

Ethernet - RS232
Echo simulation

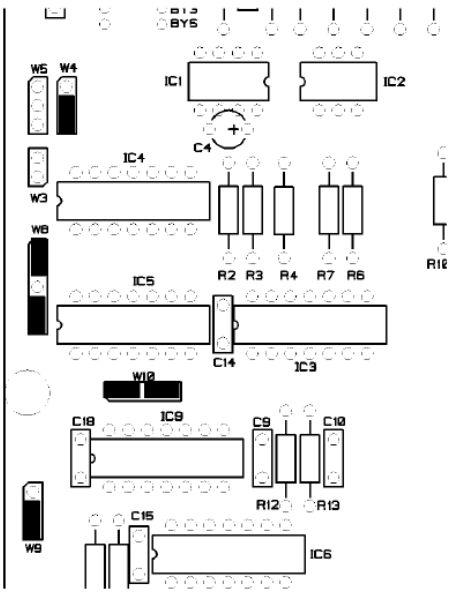

RS 232 - POLNET
Normal Echo

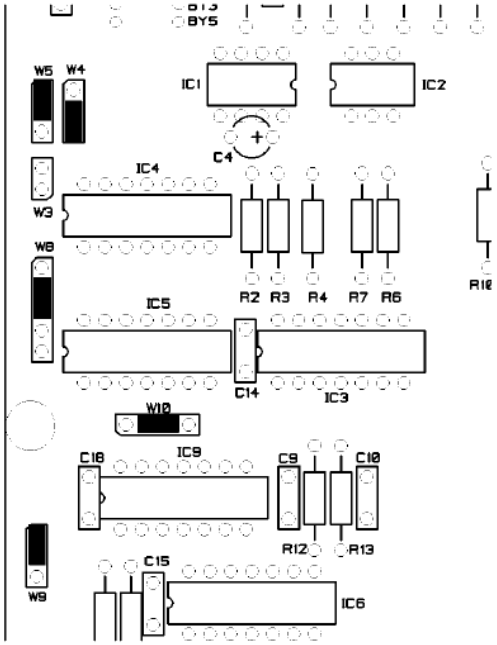

RS 232 - POLNET
Echo Cancel

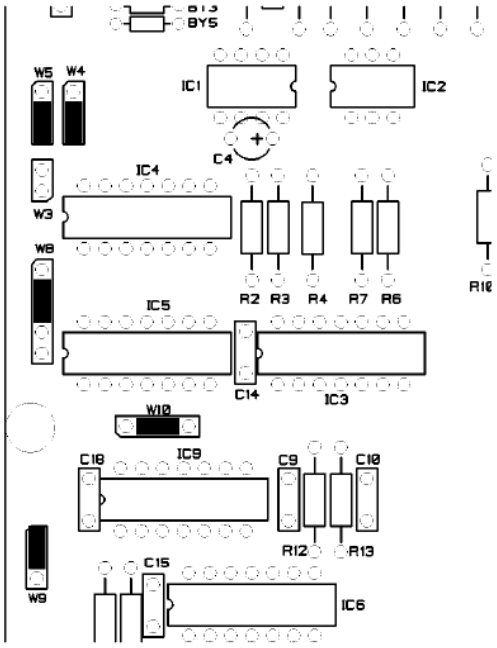

RS232 / Radio modem
Echo restore

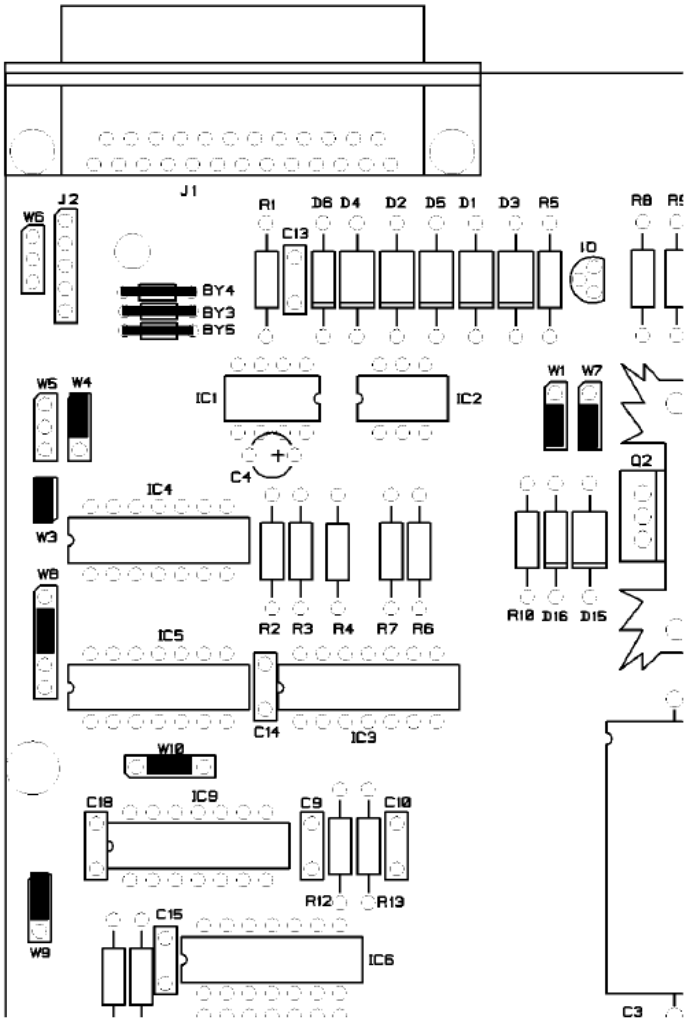

POLNET One master, max 62 signs, up to 2500 meter network.

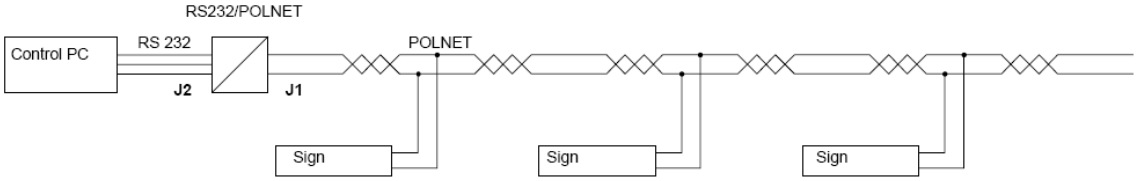

POLNET Two masters, max 62 signs, up to 2500 meter network.

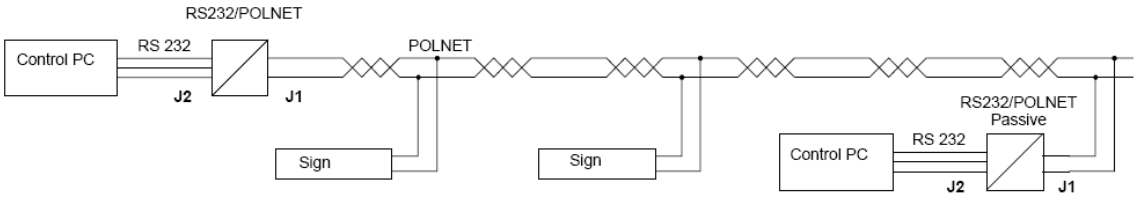

Radio modem, one or more POLNET, max 62 signs, up to 2500 meter network.

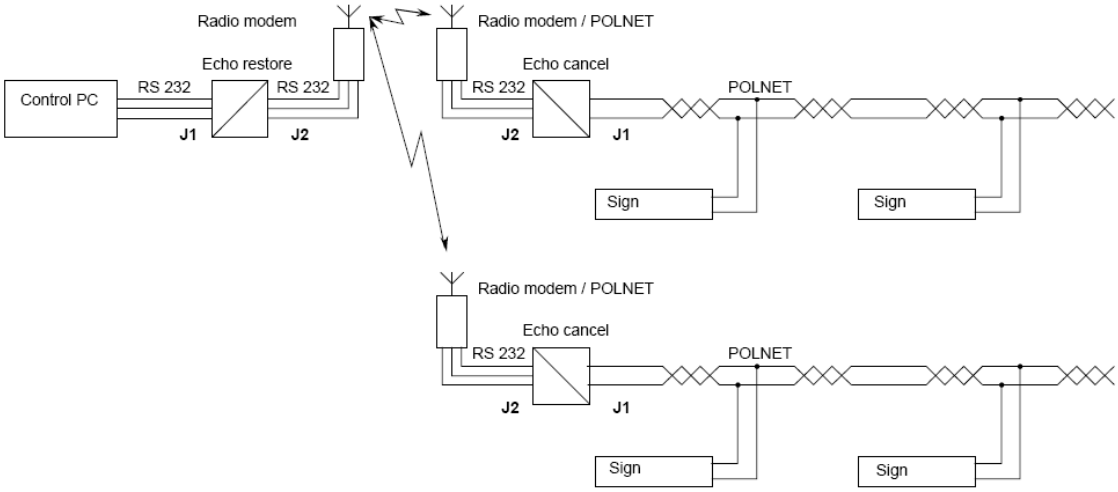

POLTECH Information System AB
Kvartsgatan 1B
S-745 40 ENKÖPING
Tel +46 (0) 171 41 45 90
Fax +46 (0) 171 41 45 95
www.poltech.se

POLNET Configurations

Datum 031228		Skala Page 1 / 3	
Rit.nr 031228-5		Ersätter	
Ritad Tho	Konstr. Tho	Godk.	

POLNET, one or more radio modem, max 62 signs, up to 2500 meter network.

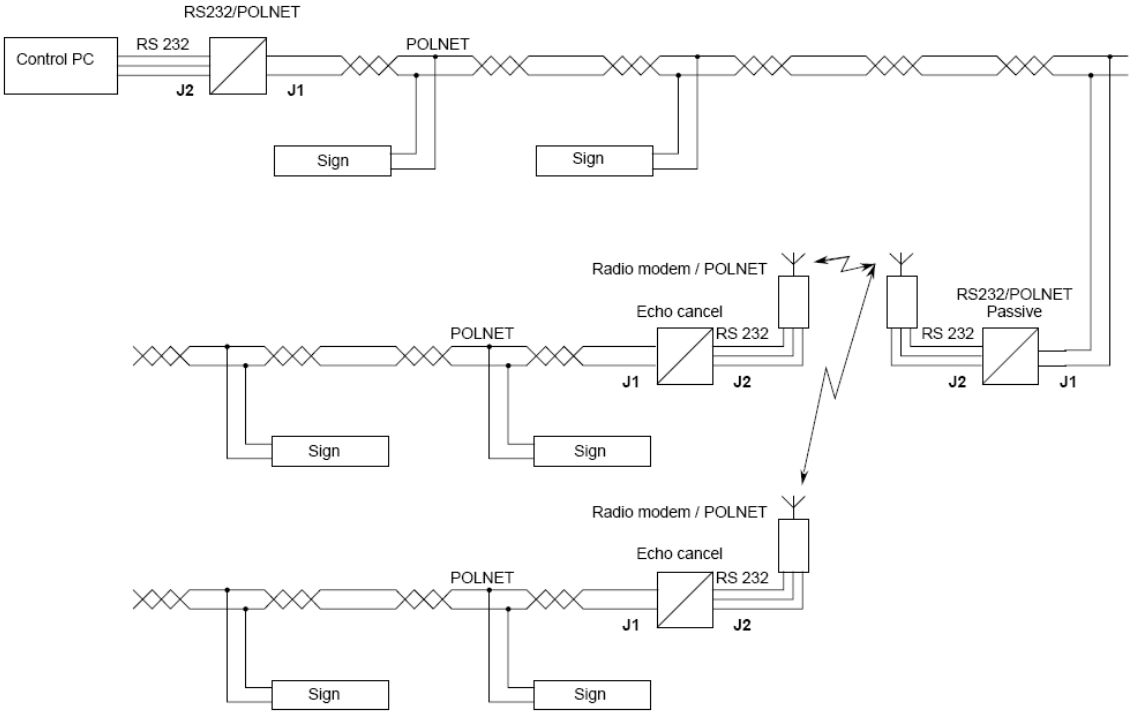

POLNET, one or more radio modem direct connected to signs, max 62 signs, up to 2500 meter network.

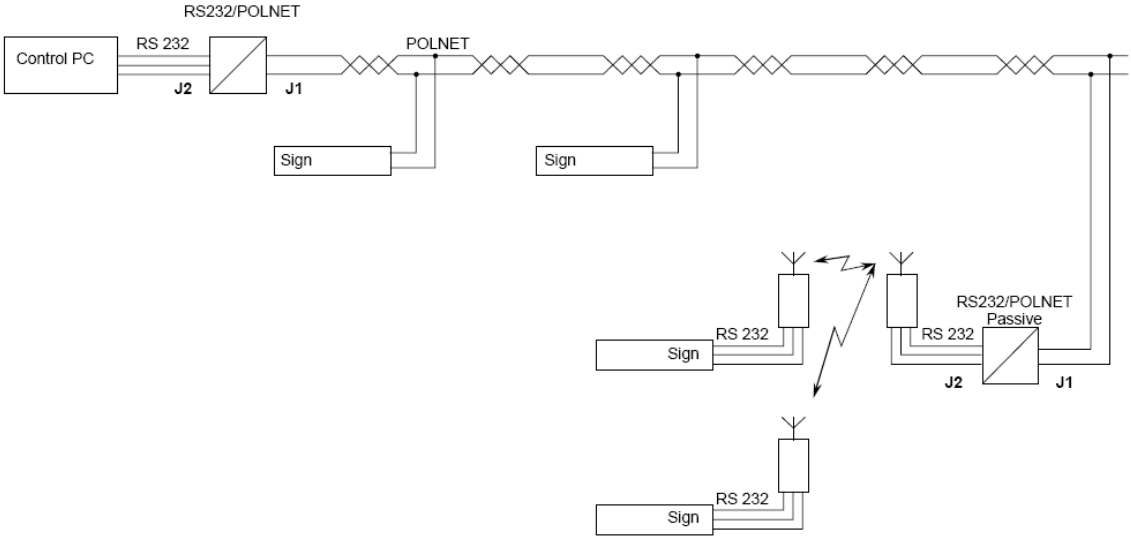

Communication: 4800 Baud 8 N1
Recommended cable, shielded twisted pair min 2 x 0.6 mm^2

POLTECH Information System AB Kvartsgatan 1B S-745 40 ENKÖPING Tel +46 (0) 171 41 45 90 Fax +46 (0) 171 41 45 95 www.poltech.se	POLNET Configurations	Datum 031228	Skala Page 2 / 3	
		Rit.nr 031228-5	Ersätter	
		Ritad Tho	Konstr. Tho	Godk.

POLNET One master, max 62 signs, up to 2500 meter network.

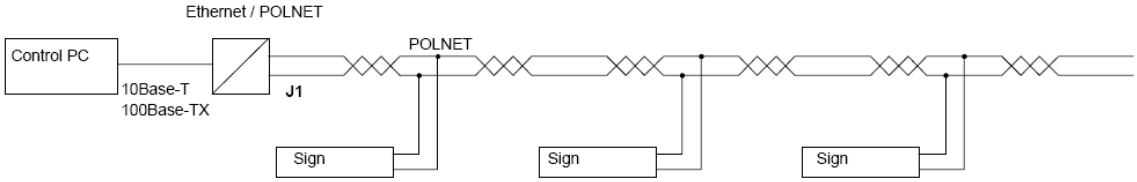

Radio modem, one or more POLNET, max 62 signs, up to 2500 meter network.

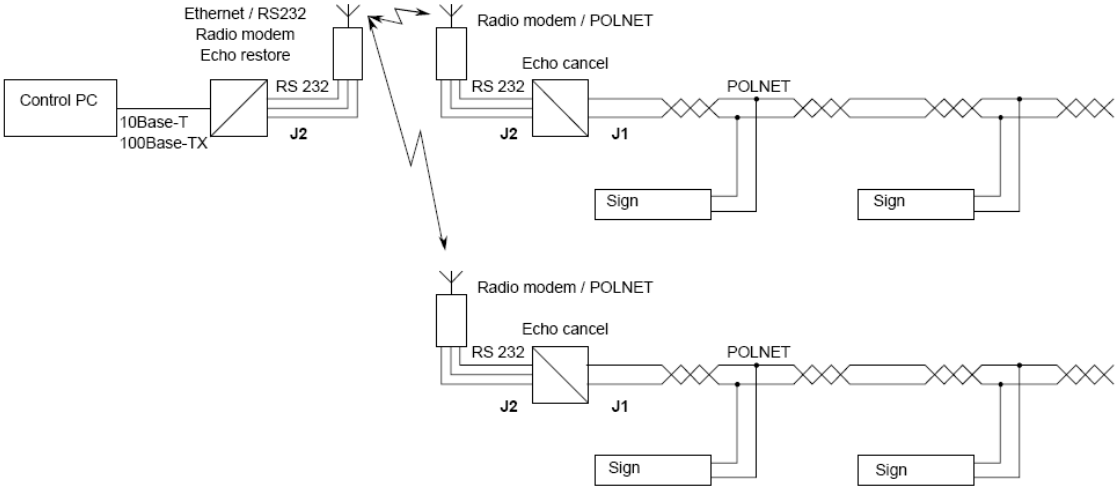

POLTECH Information System AB
Kvartsgatan 1B
S-745 40 ENKÖPING
Tel +46 (0) 171 41 45 90
Fax +46 (0) 171 41 45 95
www.poltech.se

POLNET Configurations

Datum	Skala
031228	Page 3 / 3
Rit.nr 031228-5	Ersätter
Ritad Tho	Konstr. Tho	Godk.

J1 POLNET
D-25 socket

1	PE Shield
2	Line
15	Line

J1 RS232
D-25 socket

1	PE Shield	
2	Data in	input
3	Data out	output
7	GND	

J2 RS232
D-25 socket

1	PE Shield	
2	Data in	input
3	Data out	output
6	DSR	output
7	GND	

POLTECH Information System AB
Kvartsgatan 1B
S-745 40 ENKÖPING
Tel +46 (0) 171 41 45 90
Fax +46 (0) 171 41 45 95
www.poltech.se

Connectors

Datum 031228		Skala	
Rit.nr 031228-6		Ersätter	
Ritad Tho	Konstr. Tho	Godk.	